2618283

DC SERIES

INSTALLATION AND OPERATION MANUAL

Condensing dehumidifier

Condair **DC 50 / 100 / 200**

Humidification, Dehumidification and Evaporative Cooling

condair

Thank you for choosing Condair

Installation date (MM/DD/YYYY):

Commissioning date (MM/DD/YYYY):

Site:

Model:

Serial number:

Proprietary Notice

This document and the information disclosed herein are proprietary data of Condair Group AG. Neither this document, nor the information contained herein shall be reproduced, used, or disclosed to others without the written authorisation of Condair Group AG, except to the extent required for installation or maintenance of recipient's equipment.

Liability Notice

Condair Group AG does not accept any liability due to incorrect installation or operation of the equipment or due to the use of parts/components/equipment that are not authorised by Condair Group AG.

Copyright Notice

© Condair Group AG, All rights reserved.

Technical modifications reserved.

INDEX

1. INTRODUCTION 5
1.1 Preliminary information 5
1.2 Aim and content of the manual 5
1.3 How to store this manual 5
1.4 Manual Update 5
1.5 How to use this manual 5
1.6 Potential Risks 6
1.7 General Description of Symbols Used 7
1.8 Safety symbols used 8
1.9 Limitations and prohibited use 8
1.10 Unit identification 9
2. SAFETY 10
2.1 Warning re potentially hazardous toxic substances 10
2.2 Refrigerant handling 11
2.3 Prevent inhalation of high vapor concentration 11
2.4 Procedures to be adopted in the event of accidental release of refrigerant 12
2.5 Main Toxicological Information Regarding the Type of refrigerant used 12
2.6 First Aid Measures 12
3. TECHNICAL CHARACTERISTICS 12
3.1 Unit description 13
3.2 Accessories description 14
3.3 Nomenclature 15
3.4 Technical data 16
3.5 Perdite di carico circuito idraulicio 18
3.6 Operation limits 19
3.7 Sound data 20
3.8 Safety devices 20
4. INSTALLATION 21
4.1 General safety guidelines and and use of symbols 21
4.2. Health and safety Considerations 21
4.3 Personal protective equipment 21
4.4 Inspection 22
4.5 Storage 23
4.6 Unpacking 23
4.7 Lifting and handling 23
4.8 Location and minimum technical clearances 24
4.9 Condensate draining connections 25
4.10 How to connect the hot water coil (HOWA) + 3 way modulating valve (KIVM) (Accessory) 25
4.11 How to remove filters 26
4.12 Desuperheater connection (RP01) 27
4.13 Installation of built-in room electronic sensor (RGDD) 28
4.14 Connecting the unit to air duct channels 28
4.15 Accessory installation HYGR 30
4.16 Serial interface card RS485 (INSE) 30
4.17 Electric connections: preliminary safety information 31
4.18 Electrical data 32
4.19 How to connect the power supply 32
4.20 Electric connections 33
4.21 Basic refrigerant circuit layout 34

5. UNIT START UP 35
5.1 Preliminary checks 35
5.2 Description of the control panel 36
5.3 Internal menus 37
5.4 Loads menu 37
5.5 Main menu 38
5.6 Other notes 39
6. MAINTENANCE OF THE UNIT 40
6.1 General warnings 40
6.2 Drive access 41
6.3 Scheduled maintenance 41
6.4 Periodical checks 41
6.5 Refrigerant circuit repair 44
7. DECOMMISSIONING 45
7.1 Disconnect the unit 45
7.2 Disposal, recovery and recycling 45
7.3 RAEE Directive (only UE) 45
8. DIAGNOSIS AND TROUBLESHOOTING 46
8.1 Fault finding 46
9.DIMENSIONAL DRAWINGS 47
MAINTENANCE AND SERVICE REPORT 51

1. INTRODUCTION

1.1 Preliminary information

Reproduction, storage or transmission of any part of this publication in any form, without the prior written consent of the Company, is prohibited.
The unit to which these instructions refer, is designed to be used for the the purposes described and to be operated in accordance with these instructions.
The Company will not be liable for claims for damage caused to persons, animals, material goods or property caused by improper installation, adjustment and maintenance or improper use. Any use not specified in this manual is prohibited.
This document is intended to provide information only and does not form a contract with third parties.
The Company pursues a policy of constant improvement and development of its products and therefore reserves the right to change the specifications and the documentation at any time, without notice and without obligation to update existing equipment.

1.2 Aim and content of the manual

These instructions are intended to provide the information required for the selection, installation, use and maintenance of the unit.
They have been prepared in accordance with the European Union laws and with the technical standards in force at the date of issue of the instructions.
The instructions contain all the necessary information to prevent any reasonably foreseeable misuse.

1.3 How to store this manual

The manual must be kept in a suitable place with easy access for users and operators, protected from dust and damp.
The manual must always accompany the unit during the entire life cycle of the same and therefore must be transferred to any subsequent user.

1.4 Manual Update

It is recommended that the manual is updated to the latest revision available.
If updates are sent to the customer they must be added to this manual.
The latest information regarding the use of its products is available by contacting the Company.

1.5 How to use this manual

The manual is an integral part of the unit.

Users or operators must consult the manual before performing any operation and especially so when transporting, handling, installating, maintaining, or dismantling the unit in order to eliminate uncertainty and reduce risk.

In these instructions symbols have been used (described in the following paragraphs) to draw the attention of operators and users to the operations that have a higher risk and which must be performed safely.

1.6 Potential Risks

Whilst the unit has been designed to minimize any risk posed to the safety of people who will interact with it, it has not been technically possible to eliminate completely the causes of risk. It is therefore necessary to refer to the requirements and symbolism below:

LOCATION OF RISK	POTENTIAL RISK	METHOD OF INJURY	PRECAUTIONS
Thermal heat exchangers.	Small stab wounds.	Contact	Avoid any contact, use protective gloves.
Fan and fan grilles.	Cuts, eye damage, broken bones.	Insertion of sharp objects through the grid while the fans are operating.	Never put objects through the protection grilles.
Internal component: compressors and discharge pipes	Burns.	Contact	Avoid any contact, use protective gloves.
Internal component: electric cables and metallic parts	Electrocution, severe burns.	Defect in the supply cable insulation, live metallic parts.	Adequate protection of power cables, ensure correct earthing of all metal parts.
External to unit: unit enclosure	Poisoning, severe burns.	Fire due to short circuit or overheating of the supply cable external to unit.	Size cables and mains protection system in accordance with iee regulations.
Entire unit	External fire	Fire due to natural disasters or combustions of elements nearby unit	Provide the necessary fire-fighting equipment
Entire unit	Explosion, injuries, burns, poisoning, folgoramento for natural disasters or earthquake.	Breakages, failures due to natural disasters or earthquake	Plan the necessary precautions both electrical (suitable differential magneto and electrical protection of the supply lines; greatest care during the connections of the metal parts), and mechanical (special anchors or seismic vibrations to prevent breakages or accidental falls).

In accordance with the applicable requirements for refrigeration systems containing flammable refrigerants, the management of the risk associated with fires external to the product is not the responsibility of the unit itself but of the installation design. The system designer and the installer must therefore define and implement the necessary measures to ensure that the unit is not exposed to the effects of an external fire, taking into account the characteristics of the site, the intended use of the area and the applicable regulatory requirements.

1.7 General Description of Symbols Used

Safety symbols combined in accordance with ISO 3864-2:

BANNED
A black symbol inside a red circle with a red diagonal indicates an action that should not be performed.

WARNING
A black graphic symbol added to a yellow triangle with black edges indicates danger.

ACTION REQUIRED
A white symbol inserted in a blue circle indicates an action that must be done to avoid a risk.

Safety symbols combined in accordance with ISO 3864-2:

The graphic symbol “warning” is qualified with additional safety information (text or other symbols).

1.8 Safety symbols used

GENERAL RISK
Observe all signs placed next to the pictogram. The failure to follow directions may create a risk situation that may be injurious to the user.

ELECTRICAL HAZARD
Observe all signs placed next to the pictogram.
The symbol indicates components of the unit and actions described in this manual that could create an electrical hazard.

MOVING PARTS
The symbol indicates those moving parts of the unit that could create risk.

HOT SURFACES
The symbol indicates those components with high surface temperature that could create risks.

SHARP SURFACES
The symbol indicates components or parts that could cause stab wounds.

EARTH CONNECTION
The symbol identifies Earthing connection points in the unit.

READ AND UNDERSTAND THE INSTRUCTIONS
Read and understand the instructions of the machine before any operations.

RECOVER OR RECYCLE MATERIAL

FIRE HAZARD
The symbol indicates to warn of flammable material

1.9 Limitations and prohibited use

The machine is designed and built exclusively for the uses described in “Limitations of use” of the technical manual.
Any other use is prohibited because it may pose a potential risk to the health of operators and users.

The unit is not suitable for operations in environments:
1. With dusty atmospheres;
2. With potentially explosive atmospheres;
3. Where there are vibrations
4. Where there are electromagnetic fields;

1.10 Unit identification

Each unit has a rating plate that provides key information regarding the machine.
The rating plate may differ from the one shown below as the example is for a standard unit without accessories.
For all electrical information not provided on the label, refer to the wiring diagram.
A facsimile of the label is shown below:

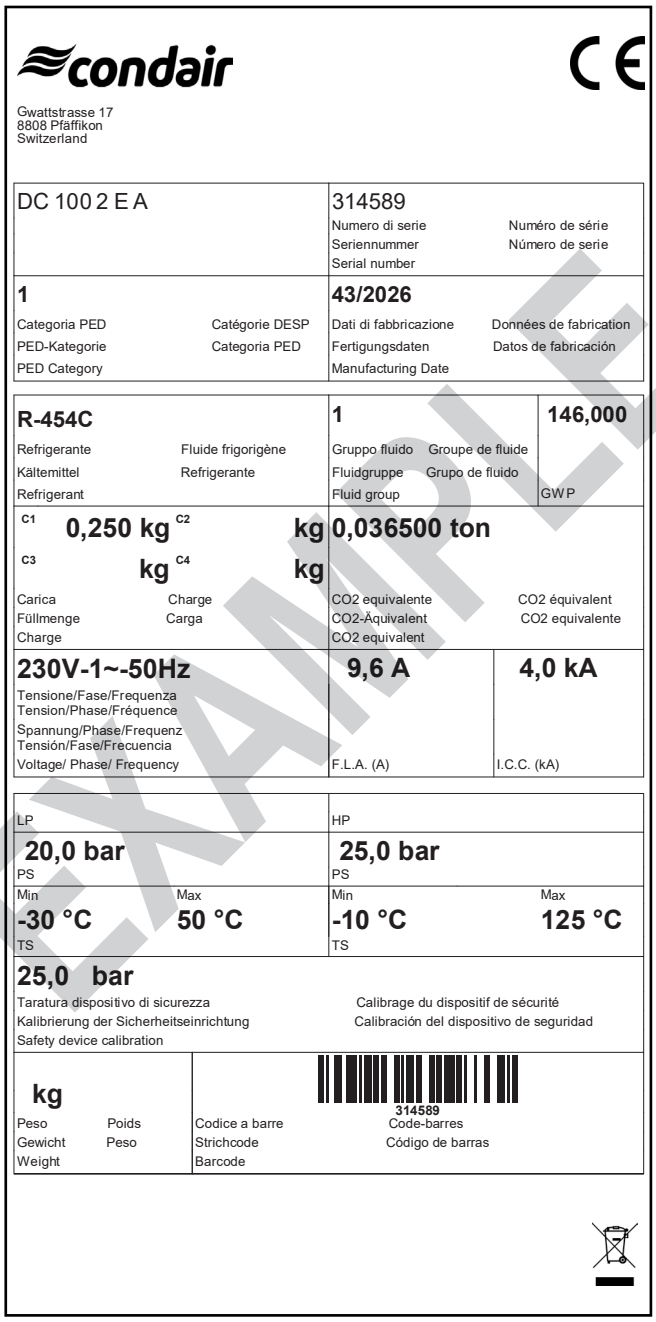

The product label should never be removed from the unit.

2. REFRIGERANT AND OIL

2.1 Warning on potentially hazardous toxic substances

The refrigerant R454C is classified as **A2L** according to **the ISO 817** standardz , they have the following characteristics:
• **Toxicity**: **Class A**, indicating low toxicity.
• **Flammability**: **Class 2L**, indicating slight flammability with a low flame spread rate (less than 10 cm/s).

2.1.1 Identification of the Type of Refrigerant Fluid Used: R454C

• Difluoromethane* CAS-No 75-10-5, classification, H220 Flammable gases, Category 1, H280 Gases under pressure, Liquefied gas, concentration 68.9 % by weight
• 2,3,3,3-Tetrafluoropropene* CAS-No 754-12-1, classification, H220 Flammable gases, Category 1, H280 Gases under pressure, Liquefied gas, concentration 31.1 % by weight
* Voluntarily-disclosed non-hazardous substance

2.1.2 Identification of the Type of Oil Used.

The lubricant used is polyester oil. Please refer to the information provided on the compressor data plate.

For further information regarding the characteristics of the refrigerant and oil used, refer to the safety data sheets available from the refrigerant and oil manufacturers.

Main Ecological Information Regarding the Types of refrigerants Fluids used.

ENVIRONMENTAL PROTECTION : Read the ecological information and the following instructions carefully.

2.1.3 Persistence and degradation

The refrigerants used decompose relatively quickly in the lower atmosphere (troposphere). The decomposed products are highly dispersible and therefore have a very low concentration. They do not contribute to photochemical smog and are not classified as VOCs (volatile organic compounds) under European regulations (Kyoto Protocol).

2.1.4 Effects of discharges

Discharges into the atmosphere of this product does not cause a long-term contamination.

2.1.5 Exposure controls and personal protection

Wear protective clothing and gloves, protect your eyes and face

2.1.6 Professional exposure limits

Derived no Effect Level (DNEL) according to Regulation (EC) No. 1907/2006:

Substance name	End Use	Exposure routes	Potential health effects	Value
Difluromethane	Workers	Inhalation	Long-term system effects	7035 mg/m^3
	Consumers	Inhalation	Long-term system effects	750 mg/m^3
2,3,3,3-Tetrafluoropropene	Workers	Inhalation	Long-term system effects	950 mg/m^3

Predicted No Effect Concentration (PNEC) according to Regulation (EC) No. 1907/2006

Substance name	Environmental Comportament	Value
• Difluoromethane	Fresh Water	0.142 mg/l
	Intermittent use/release	1.42 mg/l
2,3,3,3- • Tetrafluoropropene	Fresh Water sediment	0.534 mg/kg
	Fresh Water	0.1 mg/l
	Intermittent use/release	1 mg/l
	Fresh Water sediment	1.77 mg/kg dry weight (d.w.)
	Soil	1.54 mg/kg dry weight (d.w.)
	Marine Water	0.01 mg/l
	Marine sediment	0.178 mg/kg dry weight (d.w.)

2.2 Refrigerant handling

The units use R454C refrigerant, classified according to EN 378-1 as slightly flammable (A2L). It's recommended, during the positioning phase, to follow all the prescriptions in the cited standard. In particular it's recommended to avoid positioning the unit near slits, cavedium, skylight, pits. The refrigerant is heavier than air so it uses to layer at the bottom.

Users and maintenance personnel must be adequately informed about the possible risks of handling potentially toxic substances. Failure to follow such instructions can cause damage to personnel or to the unit.

The units use the R454C gas as refrigerant, which is classified according to EN 378: 2017 as slightly flammable (A2L). It is recommended, during the positioning phase, to follow all the prescriptions in the cited standard.
In particular, it is recommended to avoid positioning the unit near slits or cavedium/sky light through which a possible loss of refrigerant may penetrate adjacent or underground rooms.

CAUTION - Handling R454C (A2L) refrigerant
R454C refrigerant is classified as A2L, i.e. low flammability. Handling and use must be carried out only by qualified and adequately trained personnel, in compliance with applicable safety regulations.

To ensure safety and compliance with standards, it is necessary to follow the indications given in the EN 378 series
In addition to these regulations, it is essential to comply with applicable local and international laws. In particular:
• Verify that the installation environment allows the use of A2L type refrigerants based on the available ventilation and the maximum allowable concentration (LFL).
• Use specific tools and equipment for low-flammability refrigerants.
• Ensure proper management of leaks and disposal of refrigerant in compliance with environmental regulations.

Recommendation: To reduce the risks associated with handling R454C, it is recommended to consult the present manual and conduct a specific risk assessment prior to installation or maintenance.

2.3 Prevent inhalation of high vapor concentration

Atmospheric concentrations of refrigerant must be minimized and kept to a level that is below the occupational exposure limit. Vapor is heavier than air and can form dangerous concentrations near the ground where the ventilation rate is lower. Always ensure adequate ventilation. Avoid contact with open flames and hot surfaces as this can cause toxic and irritating decomposition products to form. Avoid contact between liquid refrigerant and the eyes or skin.

2.4 Procedures to be adopted in the event of accidental release of refrigerant

Ensure suitable personal protection (especially respiratory protection) during cleaning operations.
If deemed safe, isolate the source of the leak. If the leakage is small and if adequate ventilation is provided, allow the refrigerant to evaporate. If the loss is substantial ensure that measures are taken to adequately ventilate the area.
Contain spilled material with sand, earth or other suitable absorbent material.
Do not allow the refrigerant to enter drains, sewers or basements, as pockets of vapor can form.

2.5 Main Toxicological Information Regarding the Type of refrigerant used

2.5.1 Inhalation

A high atmospheric concentration can cause anaesthetic effects with possible loss of consciousness. Prolonged exposure may lead to irregular heartbeat and cause sudden death. Higher concentrations may cause asphyxia due to the reduced oxygen content in the atmosphere.

2.5.2 Contact with skin

Splashes of nebulous liquid can produce frostbite. Probably not hazardous if absorbed trough the skin. Repeated or prolonged contact may remove the skin's natural oils, with consequent dryness, cracking and dermatitis.

2.5.3 Contact with eyes

Splashes of liquid may cause frostbite.

2.5.4 Ingestion

While highly improbable, may produce frostbite.

2.6 First Aid Measures

Adhere scrupulously to the warnings and first aid procedures indicated below.

2.6.1 Inhalation

Move the person away from the source of exposure, keep him/her warm and let him/her rest. Administer oxygen if necessary. Attempt artificial respiration if breathing has stopped or shows sings of stopping. If the heart stops, perform external heart massage. Seek medical assistance.

2.6.2 Contact with skin

In case of contact with skin, wash immediately with lukewarm water. Thaw tissue using water. Remove contaminated clothing. Clothing may stick to the skin in case of frostbite. If irritation, swelling or blisters appear, seek medical assistance.

2.6.3 Contact with eyes

Rinse immediately using an eyewash or clean water, keeping eyelids open, for at least ten minutes. Seek medical assistance.

2.6.4 Ingestion

Do not induce vomiting. If the injured person is conscious, rinse his/her mouth with water and make him/her drink 200-300ml of water. Seek immediate medical assistance.

2.6.5 Further medical treatment

Treat symptoms and carry out support therapy as indicated. Do not administer adrenaline or similar sympathomimetic drugs following exposure, due to the risk of cardiac arrhythmia.

3. TECHNICAL CHARACTERISTICS

3.1 Unit description

The series of dehumidifiers are high-performance units specifically designed for applications where humidity control is required to prevent condensation and ensure optimum indoor comfort.
The units have been designed for easy maintenance. All internal components are readily accessible, allowing quick replacement when required and minimizing maintenance time and costs.
Thanks to their compact design, the units can be easily installed even where installation space is limited.
The range consists of 7 models, covering a dehumidification capacity from 50 to 900 l/24 h.All units are equipped as standard with hot gas defrost, including a complete solenoid valve assembly for hot gas injection into the evaporator coil whenever frost formation occurs.
Temperature and humidity probes are available as optional accessories.

3.1.1 Frame

All units are made from hot-galvanised thick sheet metal, painted with polyurethane powder enamel at 180°C to ensure the best resistance against the atmospheric agents and to operate in aggressive environments. The frame is self-supporting with removable panels. All screws and rivets used are made from stainless steel.

3.1.2 Refrigerant circuit

The refrigeration circuit is manufactured using components supplied by leading international manufacturers and is assembled in accordance with applicable reguations requirements for brazing processes. The refrigerant used is R454C. The refrigeration circuit includes: Filter drier, Thermostatic expansion valve with external equalizer, Schrader service valves for maintenance and pressure checks, Safety device (in compliance with the PED Directive).

3.1.3 Compressors

The compressors are rotative type, with thermal overload protection by a klixon embedded in the motor winding. The compressor is mounted on rubber vibration dampers and it is supplied,standard, with sound-proof cover to reduce noise emission. The inspection is possible through the frontal panel of the unit that allows the maintenance of the compressor.

3.1.4 Heat exchangers

The evaporator and condenser coils are manufactured with copper tubes and aluminium fins. All coils are coated with epoxy powder paint to provide enhanced protection against corrosion in aggressive environments. The aluminium fins have a thickness of 0.1 mm. The copper tubes are mechanically expanded into the aluminium fins to maximize heat transfer efficiency. The coil geometry has been optimized to ensure low air-side pressure drops, allowing the use of low-speed fans and consequently reducing the overall sound level of the unit. All units are equipped with condensate drain trays located beneath the heat exchangers.

3.1.5 Fans

The units are equipped with backward-curved centrifugal Plug Fans. All fans are statically and dynamically balanced. The EC electronically commutated motors are directly coupled to the fans and provide continuous speed control, ensuring high energy efficiency and low sound levels. The motors are fitted with integrated electronic protection devices and have an IP54 protection rating.

3.1.6 Air filter

It is made of synthetic filtering media, ondulated type, without electro-static charge; they are all removable for differential disposal. Efficiency class coarse 30%, accordino to UNI EN ISO 16890:2017.

3.1.7 Microprocessors

All units are supplied standard with microprocessor controls. The microprocessor controls the following functions: compressor timing, automatic defrost cycles, the management of fresh and exhaust air, post heating valve and alarms. An appropriate LCD display shows the operation mode of the unit, set point and alarms.

3.1.8 Electric enclosure

The electric switch board is made according to electromagnetic compatibility norms. The accessibility to the board is possible after removing the front panel of the unit and the OFF positioning of the main switch. The following components are also standard installed: main switch, magnetic-thermal switches (as a protection fans and compressors), control circuit automatic breakers, compressor contactors, fan contactors. The terminal board is supplied with voltage free contacts for remote ON-OFF and general alarm.

3.1.9 Control and protection devices

All units are supplied as standard with the following control and protection devices: defrost thermostat that signals the microprocessor when

a defrost cycle is required and controls its termination, automatic reset high- and low-pressure switches, compressor thermal protection, and fan thermal protection.

3.1.10 Test

All the units are fully assembled and wired at the factory, carefully evacuated and dried after leak tests under pressure and then charged with refrigerant R454C.
They are all fully operational tested before shipment. They all conforms to European Directives and are individually marked with the CE label and provided with Conformity Declaration.

3.3 Accessories description

3.3.1 Electric heater (HOEL)

Aluminium bedridden heaters able to maximize the heat transfer, due to the large fins surface, to transmit 85% of the convective heat quickly and evenly, moving a large volume of air.

3.3.2 Hot water coil (HOWA)

The heat exchanger is made of copper pipes and aluminium fins. The diameter of the copper pipes is 3/8” and the thickness of the aluminium fins is 0,1 mm. The tubes are mechanically expanded into the aluminium fins to improve the heat exchange factor.

3.3.3 3 way modulating valve kit (KIVM)

It is used to control the waterflow in the coil. The valve is directly controlled from the unit microprocessor.

3.3.4 Remote mechanical hygrostat (HYGR)

To be installed on the wall, it is supplied with a regulation knob and working range from 30% to 100% with precision of 3%.

3.3.5 Humidity and Temperature electronic probe sensor (RGDD)

Built-in Electronic temperature and humidity probe.

3.4 Nomenclature

DC 100 2 E 0

DC = Dehumidifier

Capacity l/24h

0 = Standard
A = With cabinet
X = special version

E = new generation

Power supply:
2 = 230-1-50 / 230V/1~

3.5 Technical data

DC		50	100	200
Dehumidification capacity at 30°C - 80%	kg/h	2,36	4,19	8,29
Dehumidification capacity at 30°C - 60%	kg/h	1,69	3,04	6,11
Dehumidification capacity at 20°C - 60%	kg/h	1,06	1,97	3,87
Nominal input power (1)	kW	0,81	1,64	3,01
Airflow	m³/h	500	1000	1800
Available static pressure (2)	Pa	>300	>300	140
Maximum input power (1)	kW	1,0	2,1	3,7
Maximum input power (3)	KW	2,5	5,1	9,7
Electric heater	KW	1,5	3	6
Maximum input current (1)	A	10,0	11,7	19,4
Maximum input current (3)	A	16,5	24,7	45,5
Peak current (1)	A	13,9	24,5	47,3
Peak current (3)	A	20,4	37,5	73,4
Temperature/humidity operating range	°C / % RH	5-35 / 40-99%	5-35 / 40-99%	5-35 / 40-99%
Hot water coil capacity (4)	KW	3,5	8,5	15,2
Desuperheater (5)	KW	0,4	0,8	1,2
Power supply	V/Ph/Hz	230/1/50	230/1/50	230/1/50
Sound power level (6)	dB(A)	58,5	62,5	70
Sound pressure level (7)	dB(A)	44,6	48,3	55,3
Refrigerant		R454C	R454C	R454C
Refrigerant charge	Kg	0,25	0,37	0,7
Global warming potential	GWP	146	146	146
Equivalent CO_2 charge	t-CO_2e	0,037	0,054	0,102
Dimension				
Height	mm	781	781	864
Width	mm	575	875	1075
Depth	mm	530	530	614
Weight	kg	60	90	135

Performances are calculated with low fan speed and are referred to the following conditions:
(1) Temperature 30°C; Humidity 80%.
(2) Temperature 20°C; Humidity 60%.
(3) With electric heater.
(4) Room temperature 30°C; water temperature 80/70°C, compressor switched off.
(5) Room temperature 30°C/80%; water temperature 30/35°C.
(6) Sound power level calculated according to ISO 3744.
(7) Sound pressure level measured in free field, at 1 mt from the unit, directional factor Q=2 according to ISO 3744.

The refrigerant data may change without notice. It is therefore necessary to refer always to the silver label placed on the unit.

3.5.1 Hot water coil (Accessory)(HOWA)

Models DC		50	100	200
Hot water coil capacity	kW	3,5	7	11,8
Waterflow	l/h	308	620	1041
Water pressure drops	kPa	40,09	25,06	13,42

3.5.2 Environmental Limits for Corrosive Substances

To prevent premature corrosion and ensure correct operation of the unit, the installation environment shall comply with the following limits.

Substance / parameter	Reference medium	Maximum permitted concentration
Chlorides, Cl^-	Water / aerosol	≤ 100 mg/L
Free chlorine	Pool water	0,5 to 1,5 mg/L
Combined chlorine	Pool water	≤ 0,4 mg/L
Trichloramine, NCl_3	Air	≤ 0,5 mg/m³
Bromine, Br_2	Pool water	≤ 2 mg/L
Salinity	Pool water	≤ 6.000 mg/L
Ozone, O_3	Air	≤ 0,05 ppm
Ammonia, NH_3	Air	≤ 1 ppm
Gaseous chlorine, Cl_2	Air	≤ 0,001 ppm, 1 ppb
Hydrochloric acid, HCl	Air / aerosol	Not permitted
Hydrogen sulphide, H_2S	Air	≤ 0,003 ppm, 3 ppb
Sulphur dioxide / sulphur trioxide, SO_2 / SO_3	Air	≤ 0,010 ppm, 10 ppb
pH	Pool water	7,2 to 7,6

The salinity limit specified in the table applies only to pool water. Direct exposure of the unit to saline water spray, saline or chemical aerosols, or contaminated condensate is not permitted. Damage caused by such exposure, by operation outside the specified environmental limits, inadequate ventilation, improper maintenance, or installation in chemical storage, preparation or dosing rooms shall not be considered a manufacturing defect and may result in the exclusion of the affected components from the product warranty.

3.5.2 Hot water coil correction factors (HOWA)

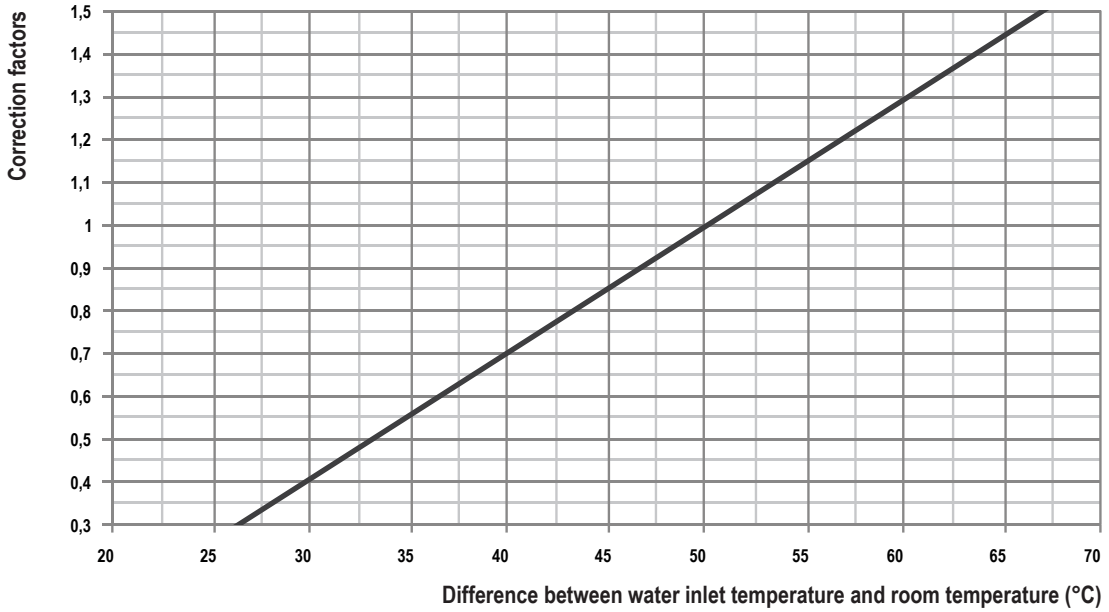

The hot water coil capacity in different conditions can be obtained multiplying the nominal capacity (See above), by the correction factor indicated in the table.

3.6 Pressure drops of hot water coil

The graphic below shows the pressure drops of the hydraulic circuit that includes the hot water coil and the 3 way ON-OFF valve.

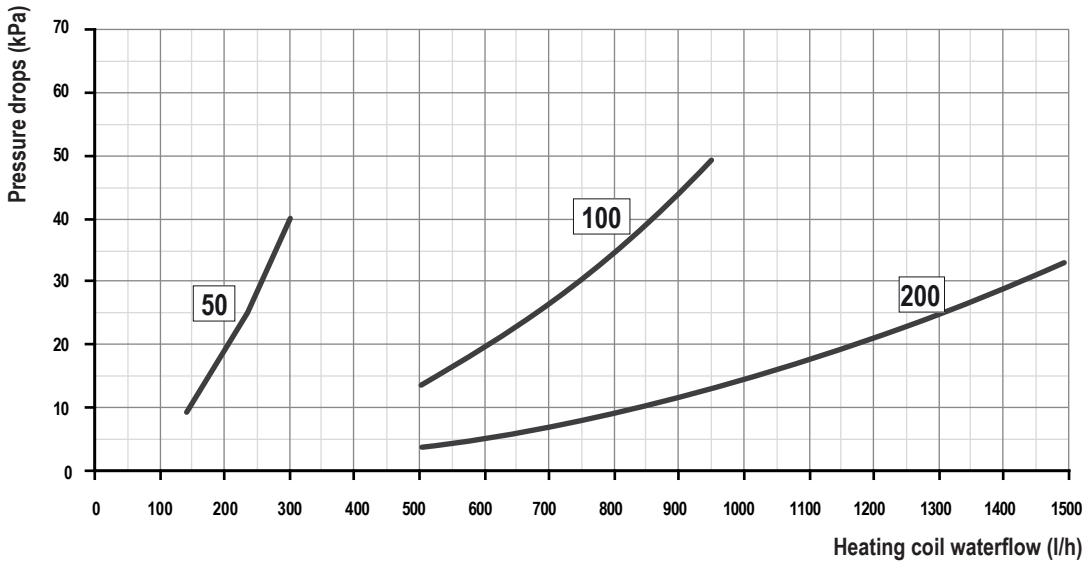

3.7 Operation limits

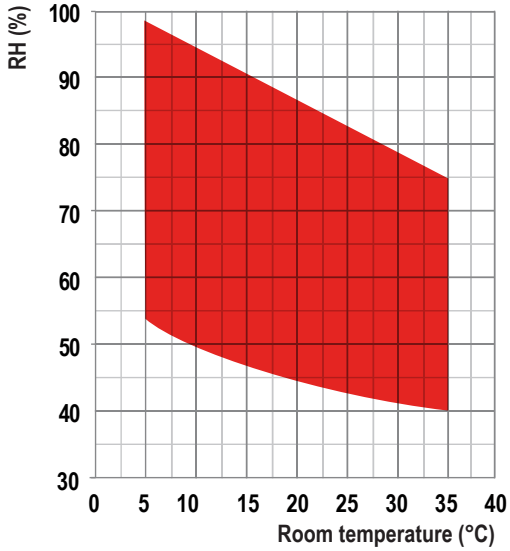

All the units can run with room humidity or external humidity between 40% and 99%.

The units MUST be used within the operation limit indicated in the diagrams (see above). the warranty will be invalidated if the units are used in ambient conditions outside the limits reported. If there is the necessity to operate in different conditions, please contact our technical office.

Units are designed to operates with hot water temperatures variables from 35°C to 80°C

In the case of HOWA or HOEL accessories, the maximum ambient temperature is limited by 5K.

3.7.1 Maximum pool water chlorine content

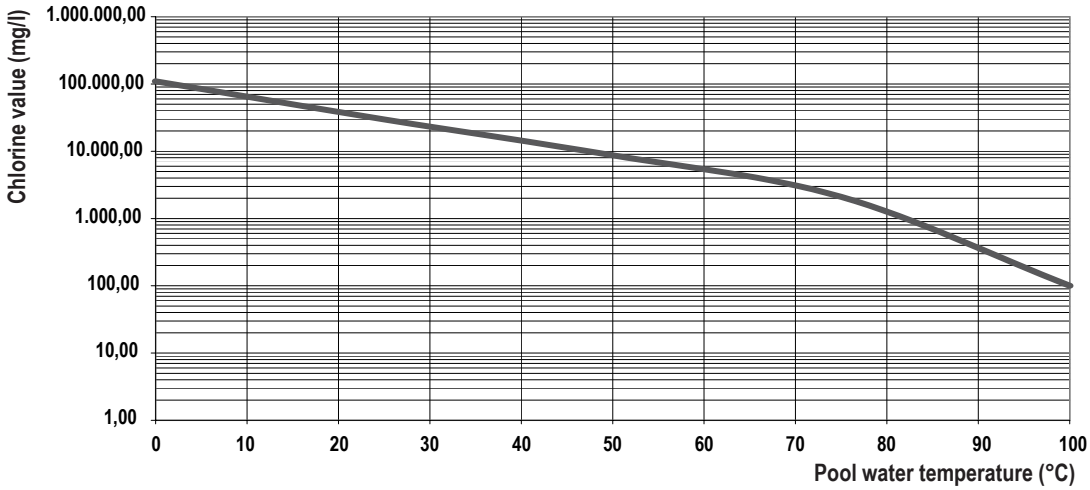

The units are designed and manufactured to operate with pool water chlorine values below the limits shown in the graph. Chlorine values above this limit can irreparably damage the unit.

3.8 Sound data

Modd.	63	125	250	500	1K	2K	4K	8K	Lw	Lp
	dB(A)	dB(A)	dB(A)	dB(A)	dB(A)	dB(A)	dB(A)	dB(A)	dB(A)	dB(A)
50	45,4	46,7	48,1	52	54,1	49,9	46,3	35,1	58,5	44,6
100	49,4	50,7	52,1	56	58,1	53,9	50,3	39,1	62,5	48,3
200	56,9	58,2	59,6	63,5	65,6	61,4	57,8	46,6	70,0	55,3

Lw: Sound power level according to ISO 3744.
Lp: Sound pressure level measured at 1 mt from the unit in free field conditions direction factor Q=2 according to ISO 3744.

3.9 Safety devices

3.9.1 High pressure switch

The high pressure switch stops the unit when the discharge compressor pressure is higher than the set value. The restart is automatic, done when the pressure is under the level set in the differential value.

3.9.2 Low-pressure switch

The low-pressure switch shuts down the unit when the suction pressure falls below a preset value. Reset is automatic and occurs only when the pressure has risen above the value indicated by the set differential.

3.9.3 Defrost probe

It's a device which signals to the electronic control, the necessity to make the defrost cycle. Once the defrost cycle is activated, the defrost thermostat determines also its conclusion.

3.9.4 Defrosting

Frost that accumulates on the heat exchanger obstructs the flow of air, reduces the available heat exchange surface area and, consequently, the unit's performance; furthermore, it can cause serious damage to the system. All units are programmed to defrost the evaporator coil according to preset timings. When the microprocessor detects the need to start a defrost cycle, the solenoid valve for hot gas injection into the evaporator inlet is opened, allowing the frost to melt. During defrosting, the fan normally remains off; however, if the return air temperature exceeds a preset threshold, the fan is activated at minimum speed to prevent the unit's thermal protection from tripping. At the end of the defrost cycle, a drip-off period is carried out, which is necessary to allow the coil to drain completely and be cleaned. Defrosting is triggered by the defrost thermostat: at preset intervals, the microprocessor reads the value from the NTC sensor or the thermostat and, based on this value, determines whether to start the defrost cycle.

4. INSTALLATION

4.1 General safety guidelines and and use of symbols

Before undertaking any task the operator must be fully trained in the operation of the machines to be used and their controls. They must also have read and be fully conversant with all operating instructions.

All maintenance must be performed by TRAINED personnel and be in accordance with all national and local regulations.

The installation and maintenance of the unit must comply with the local regulations in force at the time of the installation.

Avoid contact and do not insert any objects into moving parts.

It is recommended that natural and accidental events such as winds of abnormal force, seismic events, fire, abnormal precipitation including snowfall, lightning, flooding and inundation be considered during the design phase of the system according to current regulations.

4.2 Health and safety Considerations

The workplace must be kept clean, tidy and free from objects that may prevent free movement. Appropriate lighting of the work place shall be provided to allow the operator to perform the required operations safely. Poor or too strong lighting can cause risks.

Ensure that work places are always adequately ventilated and that respirators are working, in good condition and comply fully with the requirements of the current regulations.

4.3 Personal protective equipment

When operating and maintaining the unit, use the following personal protective equipment listed below as required by law.

Protective footwear.

Eye protection.

Protective gloves.

Respiratory protection.

Hearing protection.

4.4 Inspection

When installing or servicing the unit, it is essential to strictly follow all instructions contained in this manual and all labels applied to the unit. Failure to comply with these instructions may result in personal injury, equipment damage, or unsafe operating conditions.
Upon receipt of the unit, immediately inspect the packaging and the unit for any signs of damage. The unit leaves the factory in perfect condition; therefore, any transport-related damage must be identified, documented and reported before the delivery documents are signed. Before accepting the shipment, verify that:
• The packaging and the unit have not suffered any visible damage during transportation.
• The delivered goods correspond to the information stated in the delivery note.
• The TiltWatch® indicator installed on the packaging has not been activated.

The packaging is equipped with a TiltWatch tilt indicator, designed to monitor whether the shipment has been subjected to excessive tilting or overturning during transport. The device provides irreversible visual evidence of improper handling.

Before accepting and commissioning the unit, inspect the TiltWatch indicator:
• **Grey/Silver indicator window**: the TiltWatch has not been triggered and no excessive tilt has been detected during transportation.
• **Red indicator window**: the TiltWatch has been triggered, indicating that the package has been tilted beyond the allowable limit or overturned during handling and transport.

If the TiltWatch indicator is activated (red window), the unit shall be thoroughly inspected before installation, start-up or operation. Particular attention shall be paid to:
• Structural integrity of the casing and frame.
• Refrigerant piping and connections.
• Internal components and assemblies.
• Any evidence of refrigerant leakage or mechanical deformation resulting from transport mishandling.

Even in the absence of visible external damage, a triggered TiltWatch® indicator shall be treated as evidence of potentially improper transportation conditions. In such cases, the unit must not be commissioned until its integrity has been verified by qualified personnel.

4.4.1 In Case of Damage or Triggered Tilt Indicator

• Record all visible damage and/or the activation of the TiltWatch indicator on the carrier's delivery note before signing.
• Take photographs of the packaging, the TiltWatch indicator and any observed damage.
• Inform the supplier of the damage and/or triggered indicator within 8 days from receipt of the goods.
• For significant damage, a detailed written report and supporting documentation shall be provided.
• Retain all packaging materials until the inspection and claim evaluation process has been completed.

4.5 Storage

Units should be stored under cover and ideally, should remain in their packaging. The tools that are supplied for opening the electrics box should be formally transferred to the person responsible for the plant.

4.5.1 Shipment

The shipment must be carried out by authorised carriers and the characteristics of the vehicle used must be such as to avoid damaging the machinery transported/to be transported, neither during loading and unloading nor during transport. If the roads to be driven are irregular, the vehicle must be fitted with special suspensions or internal walls in order not to damage the unit during the shipment.

The maximum ambient temperature for storage/shipment is +45°C and the minimum is -20°C,

During shipping, the unit should NOT be excessively shocked: check the state of the shock watch to prevent damage to the unit.

4.6 Unpacking

Packaging could be dangerous for the operators.

It is advisable to leave packaged units during handling and remove it before the installation.
The packaging must be removed carefully to prevent any possible damage to the machine.
The materials constituting the packaging may be different in nature (wood, cardboard, nylon, etc.).

The packaging materials should be seperated and sent for disposal or possible recycling to specialist waste companies.

4.7 Lifting and handling

When unloading the unit, it is strongly recommended that sudden movements are avoided in order to protect the refrigerant circuit, copper tubes or any other unit component. Units can be lifted by using a forklift or, alternatively, using belts. Take care that the method of lifting does not damage the side panels or the cover. It is important to keep the unit horizontal at all time to avoid damage to the internal components.

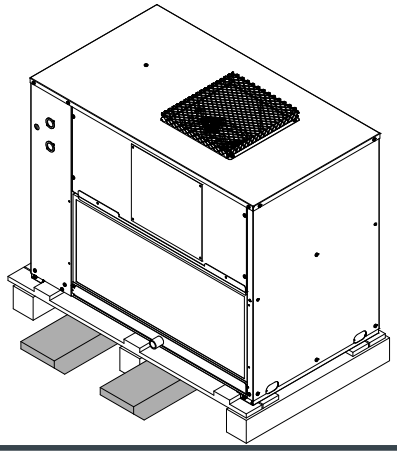

4.8 Location and minimum technical clearances

The unit has to be installed such that maintenance and repair is possible. The warranty does not cover costs for the provision of lifting apparatus, platforms or other lifting systems required to perform repairs during warranty period.

The installation site should be chosen in accordance with EN 378-1 and 378-3 standards. When choosing the installation site, all risks caused by accidental refrigerant leakage should be taken into consideration.

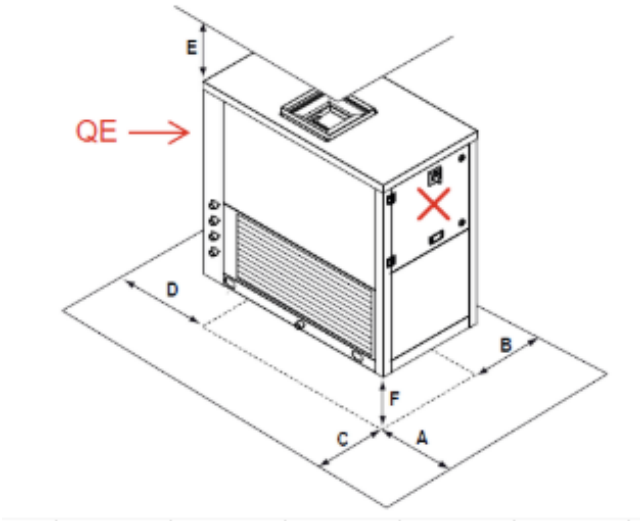

Mod.	A	B	C	D	E	F
50	400	300	500	400	100	200
100	700	300	500	400	100	200
200	900	300	500	400	100	200

In the main european markets, the minimum distance of electric appliances from water sources (basins, showers, pools, whirlpools) is 2 meters! Before the installation of the unit it is compulsory to check the national or local norms.

4.8.1 Unit installation

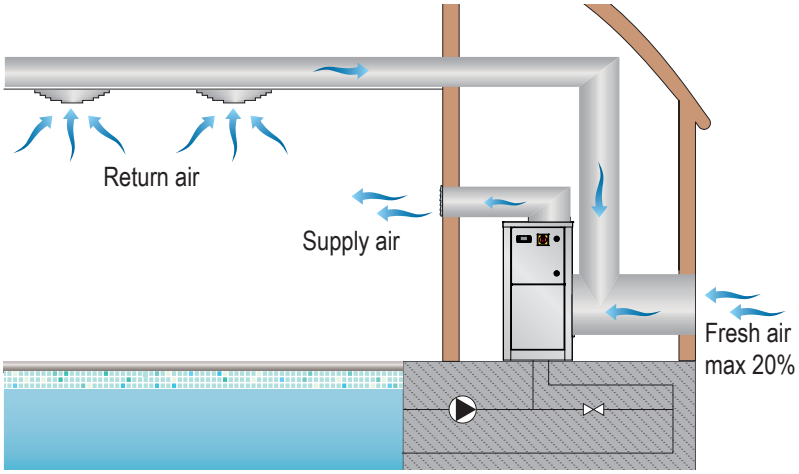

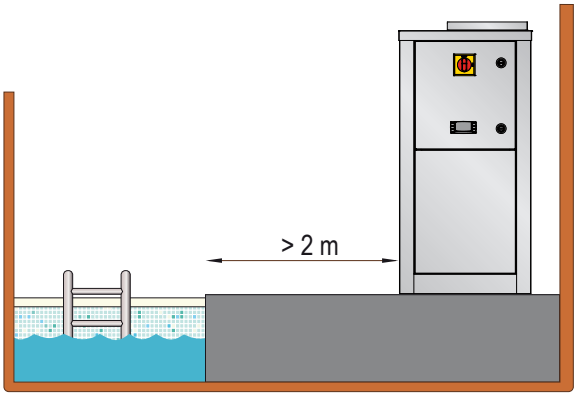

In the main european markets, the minimum distance of electric appliances from water sources (basins, showers, pools, whirlpools) is 2 meters! Before the installation of the unit it is compulsory to check the national or local norms.

4.9 Condensate draining connections

Condensate draining should be done using a flexible rubber pipe (about 1mt. long). On the condensate discharge pipe it must be installed a syphon with a minimum height equal to the suction pressure of the fan.

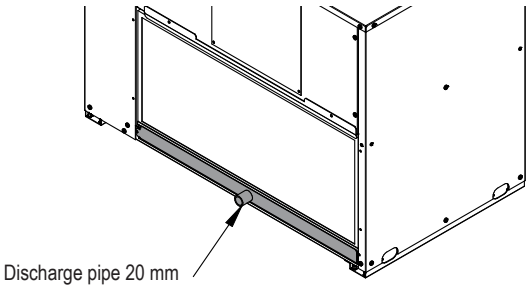

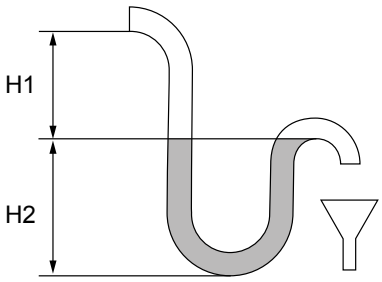

H1 = 20 mm
H2= ΔP/2 + 20 mm
ΔP = pressure difference inside the unit in mm water column
10 Pa ≈ 1 mm water column

The condensate drain line should have a water trap which may have minimum flying height equal to the suction of the fan, in any case never less than 35 mm.

4.9.1 How to remove the drip tray

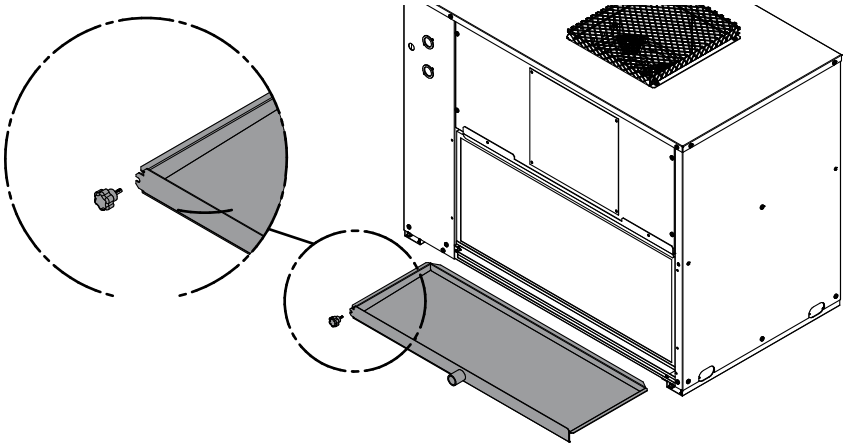

4.10 How to connect the hot water coil (HOWA) + 3 way modulating valve (KIVM) (Accessory)

To install the hot water coil it is necessary to remove the pre-knock out holes on the back panel of the unit; fix the water coil connections to the hot water coil. The hot water coil connections are 1” .
The modulating 3 way valve is installed directly in factory as showed in the picturet. It is controlled directly by the board.

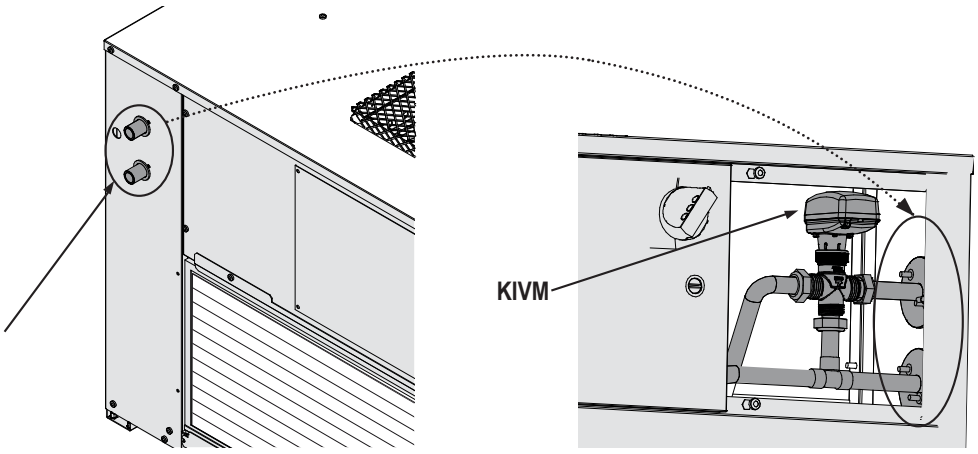

For proper equipment operation, it is recommended powering the unit with a dedicated pump. It is strongly recommended to connect the unit upstream of the collector system to ensure proper water supply (see drawing).

For a correct functioning of the unit, it's advisable to bleed carefully the circuit using the vent valve present in the unit.

The inlet maximum water temperature allowed is 80°C.
The inlet minimum water temperature allowed is 55°C.

This option is available only in combination with the electronic probe RGDD. It is not available in combination with remote mechanical hygrostat.

4.11 How to remove filters

4.11.1 Removing filters Standard configuration

Remove the fixing metallic frame and slide off the air filter as shown below.

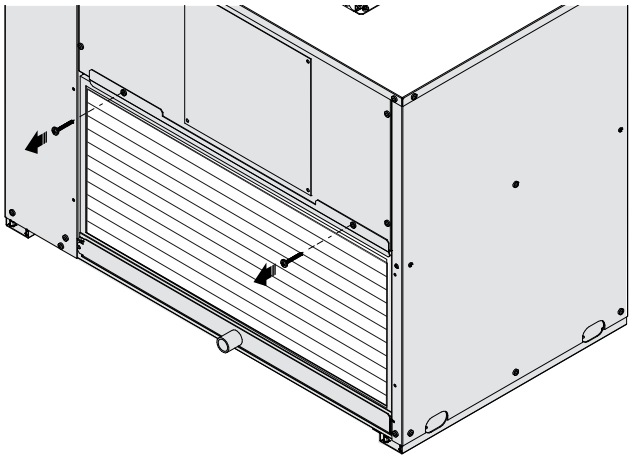

4.11.2 How to remove filter with accessory FARC

In case the unit is supplied with FARC (frame for ducted installation) slide off the air filter as shown below.

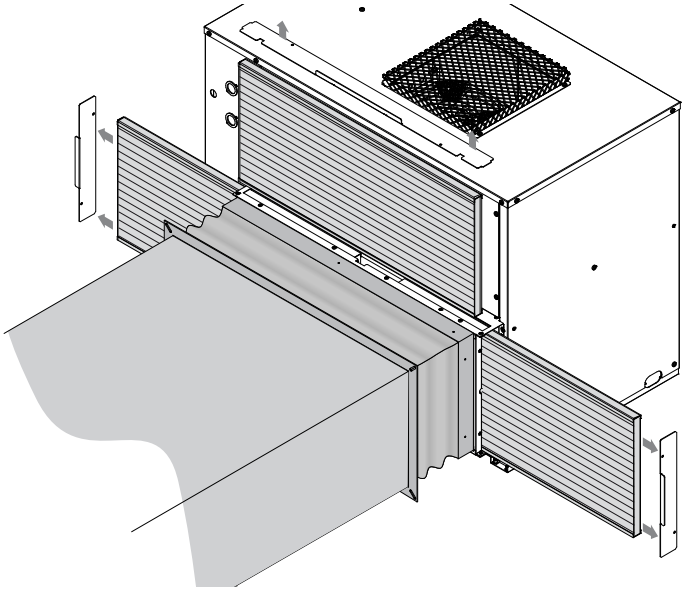

4.12 Desuperheater connection (RP01)

The desuperheater is factory fitted. It is controlled by a circulation pump (not supplied) directly managed by the control card.

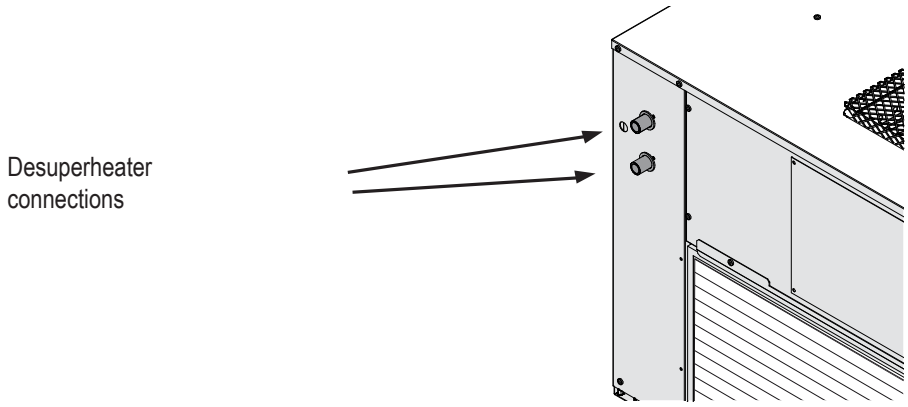

4.12.1 Partial heat recovery hydraulic connections (option)

The partial heat recovery coil must always be installed downstream of the water filter and upstream of the water disinfection treatment in the pools hydraulic circuit. The positioning of the heat exchanger upstream of the disinfection treatment is important because prolonged exposure to high concentrations of disinfectants chemicals can cause irreparable damage to the heat recovery coil. Downstream of the disinfection system has generally much higher concentration of disinfectants than in the pool. It's also important for the partial heat recovery coil to be positioned upstream of the filter, so that any debris from the pool do not pass into the coil. Which can cause poor performance of the coil and damage!

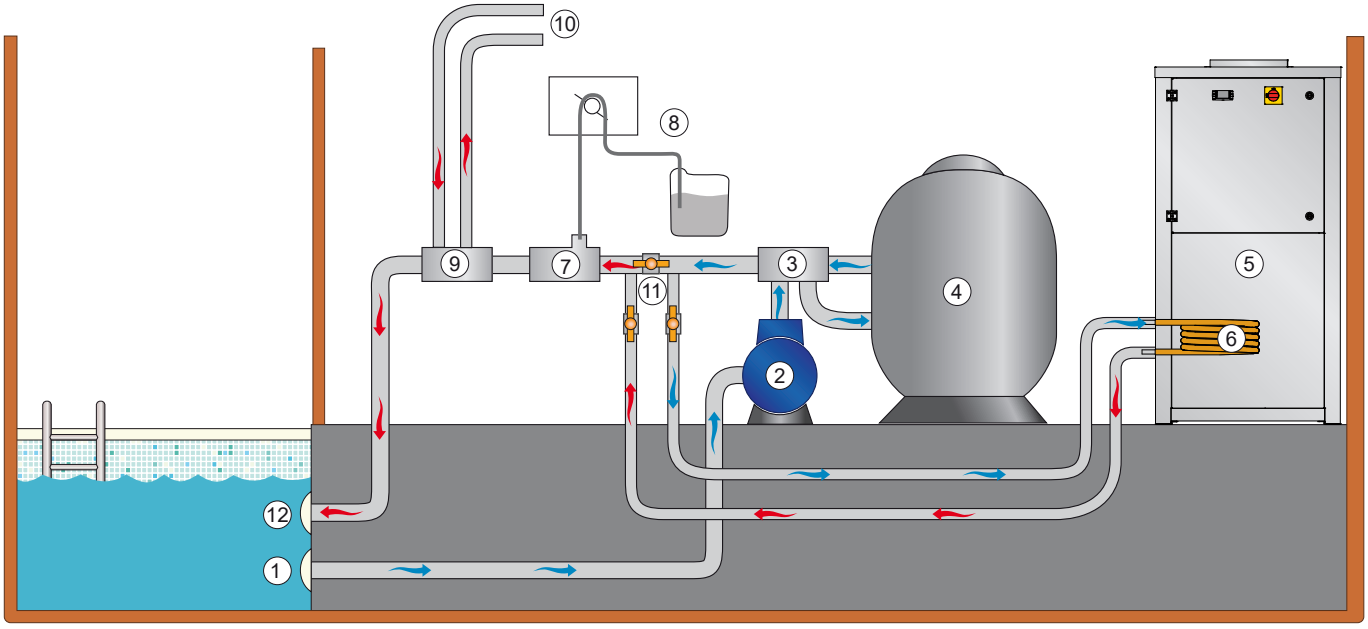

1	Water pool return	7	Pool water disinfection treatment
2	Pool water pump	8	Pool water disinfection dosing system
3	Pool water valve	9	Pool water heating system
4	Pool water filter	10	To the pool water heating system (Boiler, heat pump, etc.)
5	Dehumidifier	11	Pool water valves adjustment set
6	Partial heat recovery	12	Water pool supply

4.13 Installation of built-in room electronic sensor (RGDD)

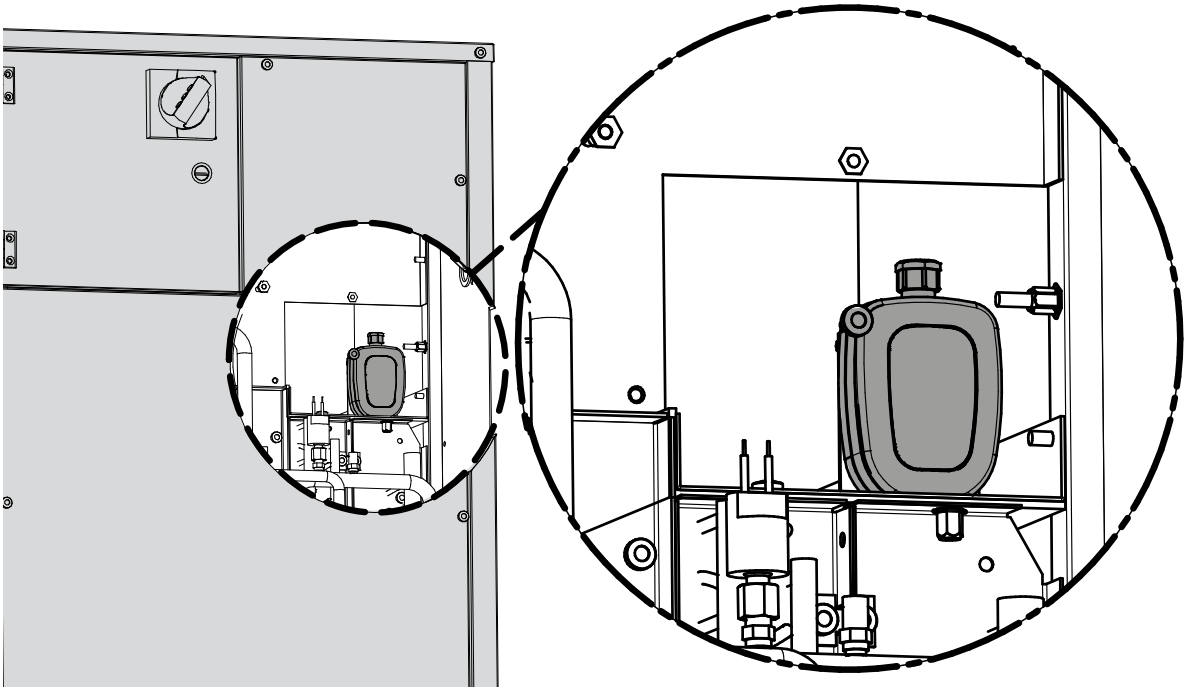

4.14 Connecting the unit to air duct channels

Units can be connected to air ducts channels either form the return and supply side.

4.14.1 Supply duct connection

In order to enable the proper functioning of the unit is important to ensure a constant air flow to the unit close to the nominal stated value. The maximum deviation allowed is 10%.

In order to limit the noise, it is necessary that the air speed inside ducts would never exceed 4 m / sec. With crossing high speed, it greatly reduces the dehumidification capacity of the unit and increases the risk of dragging of water condensation in the air ducts with a potential damage to the furniture and / or flooring.

Se recomienda utilizar siempre una junta antivibradora entre la unidad y el propio conducto para reducir la transmisión de vibraciones a los conductos.

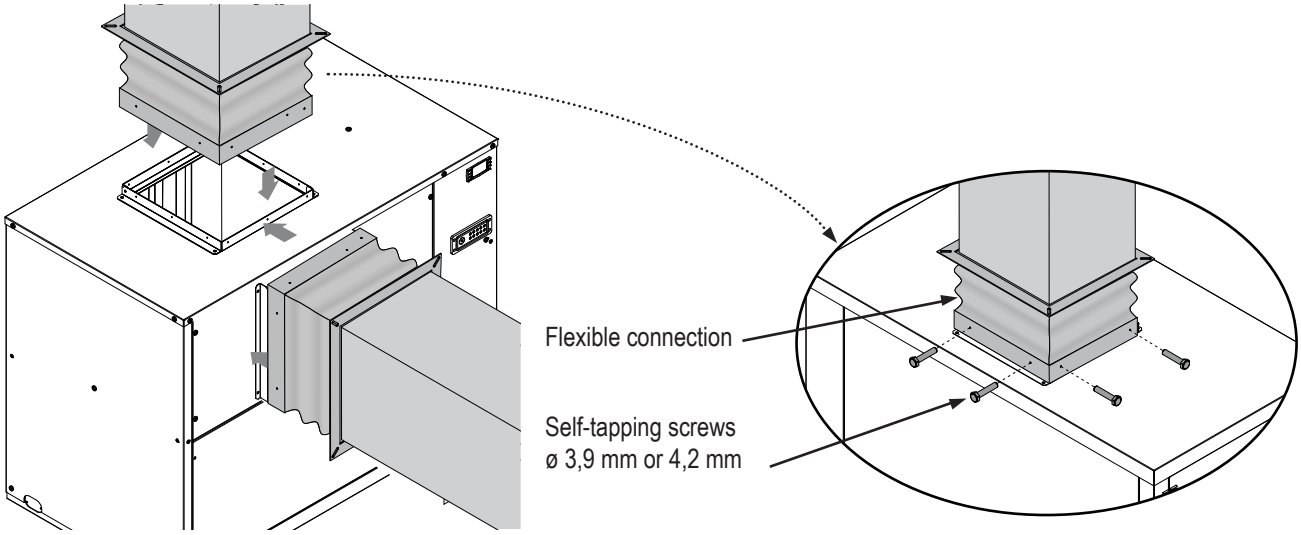

4.14.2 Return duct connection with FARC option

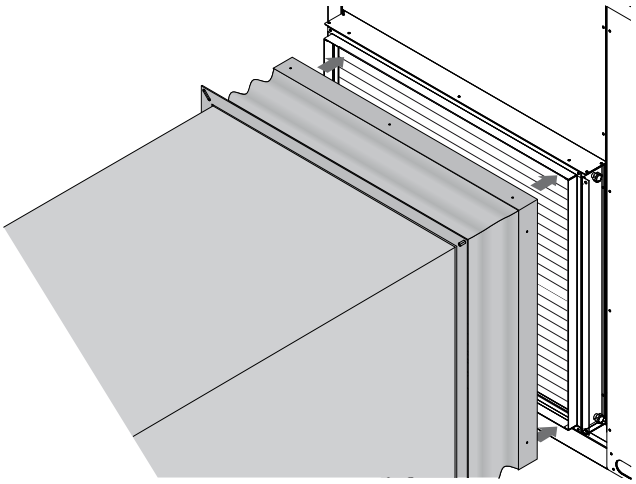

In case of return duct installation it is necessary the use of accessory FARC, a metallic frame that allow the slide off the air filter laterally.

4.15 Accessory installation HYGR

If humidistat or thermohygrostate is used, make sure that it can guarantee a correct reading of humidity and temperature in the environment and that this reading is similar to that in suction side. Under no circumstances can the sensor be placed in an ambient different from the unit's suction, nor can it be installed in areas where air flow is hampered.

To ensure a proper reading of temperature and humidity make sure that the device is not near hot or cold air flows or behind curtains or other obstacles.

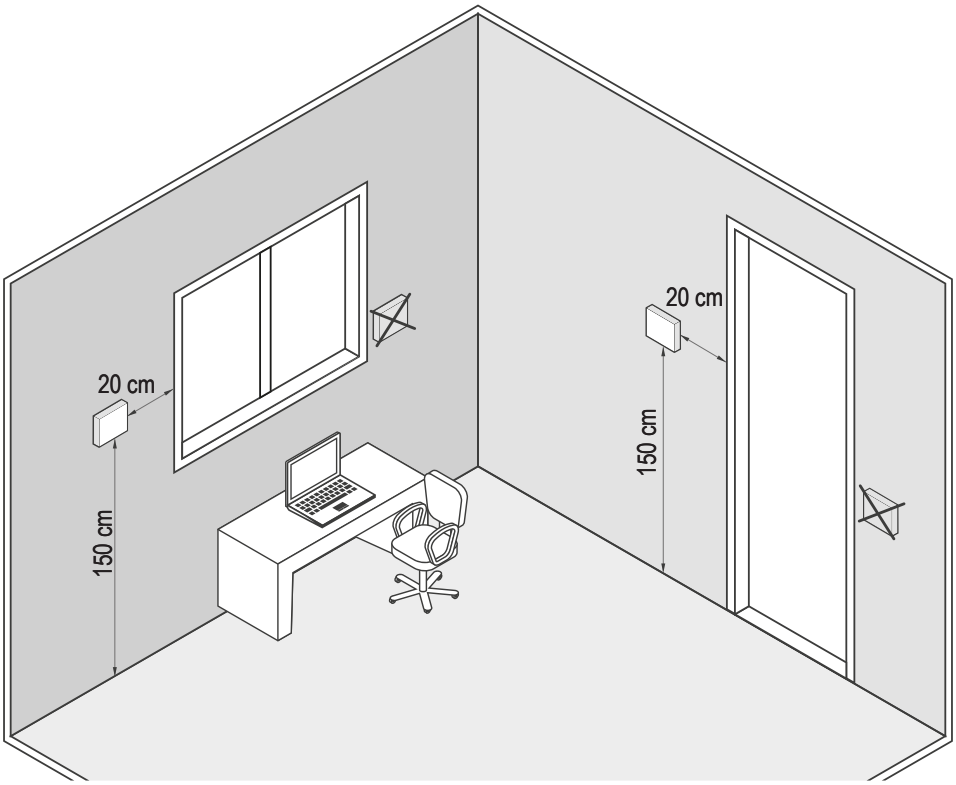

4.16 Serial interface card RS485 (INSE)

Supervision system interface (MODBUS RS485 available only)
This system allows you to remotely monitor all parameters of the unit and change their values.
It is necessary to respect the polarity of the wiring as shown in the diagram. Any reversal of polarity will result in the non-functioning unit.
The supervision connectivity cable must be telephone one type 2x0, 25 mm^2.
The unit is configured at the factory with serial address 1. In case of using the MODBUS system, you can request the list of variables by contacting the assistance.

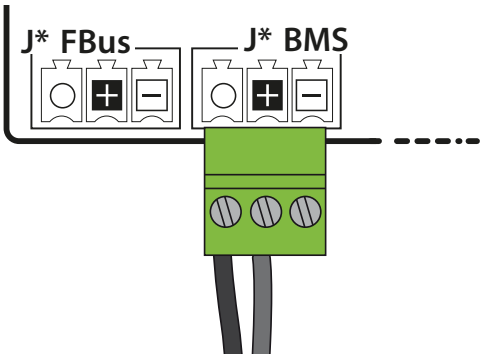

4.17 Electric connections: preliminary safety information

The electric panel is located inside the unit at the top of the technical compartment where the various components of the refrigerant circuit are also to be found. To access the electrical board, remove the front panel of the unit:

Power connections must be made in accordance to the wiring diagram enclosed with the unit and in accordance to the norms in force.

Make sure the power supply upstream of the unit is (blocked with a switch). Check that the main switch handle is padlocked and it is applied on the handle a visible sign of warning not to operate.

It must be verified that electric supply is corresponding to the unit electric nominal data (tension, phases, frequency) reported on the label in the front panel of the unit.

Power cable and line protection must be sized according to the specification reported on the form of the wiring diagram enclosed with the unit.

The cable section must be commensurate with the calibration of the system-side protection and must take into account all the factors that may influence (temperature, type of insulation, length, etc.).

Power supply must respect the reported tolerances and limits: If those tolerances should not be respected, the warranty will be invalidated.

Flow switches must be connected following the indication reported in the wiring diagram. Never bridge flow switches connections in the terminal board. Guarantee will be invalidated if connections are altered or not properly made.

Make all connections to ground provided by law and legislation.

Before any service operation on the unit, be sure that the electric supply is disconnected.

The power line and the unit external safety devices must be sized in order to ensure the correct voltage at the maximum operating conditions of the unit reported in the wiring diagram of the unit.

FROST PROTECTION
If opened, the main switch cuts the power off to any electric heater and antifreeze device supplied with the unit, including the compressor crankcase heaters. The main switch should only be disconnected for cleaning, maintenance or unit reparation.

4.18 Electrical data

The electrical data reported below refer to the standard unit without accessories.
In all other cases refer to the data reported in the attached electrical wiring diagrams.

The line voltage fluctuations can not be more than ±10% of the nominal value, while the voltage unbalance between one phase and another can not exceed 1%, according to EN60204. If those tolerances should not be respected, please contact our Company.

DC Model		50	100	200
Power supply	V/~/Hz	230V 1~ (+N) PE	230V 1~ (+N) PE	230V 1~ (+N) PE
Short-circuit current	kA	4	4	4
Control board	Vac	24	24	24
Auxiliary circuit	Vac	230	230	230
Fans power supply	V / Ph	230 / 1~	230 / 1~	230 / 1~
Line section + PE cross-section (Cu)	mm^2	2,5	2,5	4
Line section + PE cross-section with HOEL (Cu) (1)	mm^2	4	4	10

(1) The data refer to the unit with electric heaters (HOEL)

The data provided are indicative and relate to the minimum reference cross-section for preliminary sizing. For precise and final sizing of the Linea+PE system – "TO BE CARRIED OUT BY THE CLIENT'S/END-USER'S DESIGNER" – take into account installation methods, ambient temperatures, cable type, line length (permissible voltage drop), any other relevant factors (e.g. grouping factor K) and ensure coordination with the upstream protective device.

4.19 How to connect the power supply

Remove the cabinet; use the appropriate conduit present in the electric panel to connect the power cable directly to the main switch.

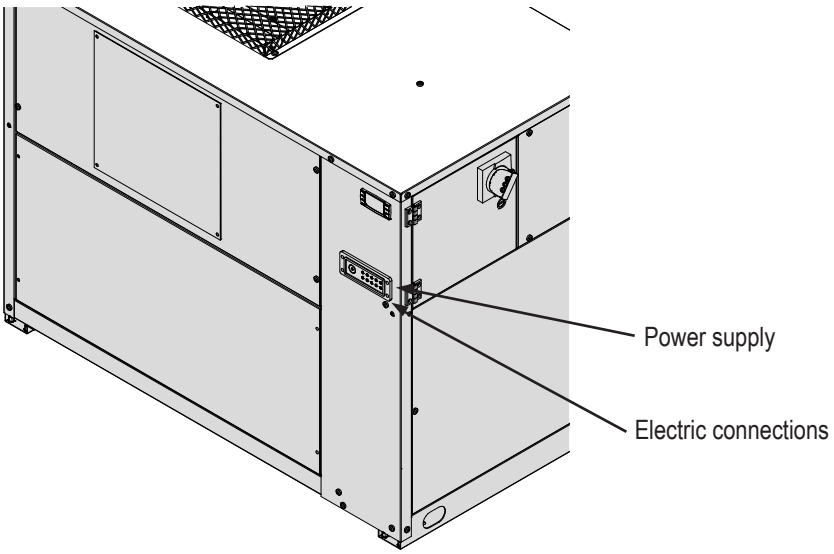

4.20 Electric connections

For the terminals connection is mandatory to refer to the wiring diagram supplied along with the unit.

4.20.1 Remote wiring connections (compulsory)

All terminals referred to in the explanations below will be found on the terminal board inside the electrical box. All electric connections mentioned below have to be made by the installer, on site.

REMOTE ON / OFF (30-134)
To switch the unit on or off from remote control.
Contacts are voltage free.
The units are supplied as standard from the manufacturer with jumpered terminals.
Contact closed, unit ON,
Contact open, unit OFF.

ROOM HYGROSTAT (UA)

Contact UA open: unit off.
Contact UA closed: unit in operation.

ROOM THERMOSTAT (TA)

Contact UA open: electric heater or 3 way valve switched off.
Contact UA closed: electric heater or 3 way valve switched on.

REMOTE GENERAL ALARM
For remote display of a general alarm, connect the visual or audible device between terminals
90-91-92.
Contacts 90/91 NC (Normally closed)
Contacts 91/92 NO (Normally opened)

4.21 Basic refrigerant circuit layout

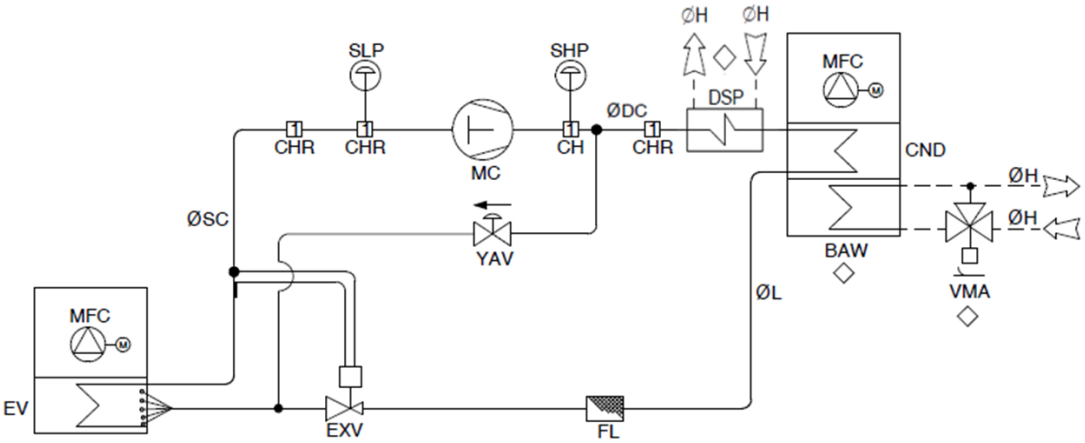

BAW	Water coil	**MC**	Compressor
CH	Charging plug 1/4 sae	**MFC**	Centrifugal fan
CHR	Charging plug 5/16 sae	**SHP**	High pressure pressostat
CND	Condenser	**SLP**	Low pressure pressostat
EV	Evaporator	**VMA**	Water modulating valve
EXV	Termostatic valve	**YAV**	Start-up and hot-gas defrost bypass solenoid valve
FL	Liquid line filter	**DSP**	Desuperheater

The cooling circuit principle diagram is purely indicative.

5. UNIT START UP

5.1 Preliminary checks

Before starting the unit the checks detailed in this manual of the electric supply and connections, the hydraulic system and the refrigerant circuit, should be performed.

Start-up operations must be performed in accordance with the instructions detailed in the previous paragraphs.

5.1.1 Before start-up

Damage can occur during shipment or installation. It is recommended that a detailed check is made, before the installation of the unit, for possible refrigerant leakages caused by breakage of capillaries, pressure switch connections, tampering of the refrigerant pipework, vibration during transport or general abuse suffered by the unit.

- Verify that the unit is installed in a workmanlike manner and in accordance with the guidelines in this manual.
- Check that all power cables are properly connected and all terminals are correctly fixed.
- The operating voltage the one shown on the unit labels.
- Check that the unit is connected to the system earth.
- Check that there is no refrigerant leakage.
- Check for oil stains, sign of a possible leak.
- Check that the refrigerant circuit shows the correct standing pressure on the pressure gauges (if present) otherwise use external ones.
- Check that the Shrader port caps are the correct type and are tightly closed.
- Check that crankcase heaters are powered correctly (if present).
- Check that all water connections are properly installed and all indications on unit labels are observed.
- The system must be flushed, filled and vented in order to eliminate any air.
- Check that the water temperatures are within the operation limits reported in the manual.
- Before start up check that all panels are replaced in the proper position and locked with fastening screws.

Do not modify internal wiring of the unit as this will immediately invalidate the warranty.

5.2 Description of the control panel

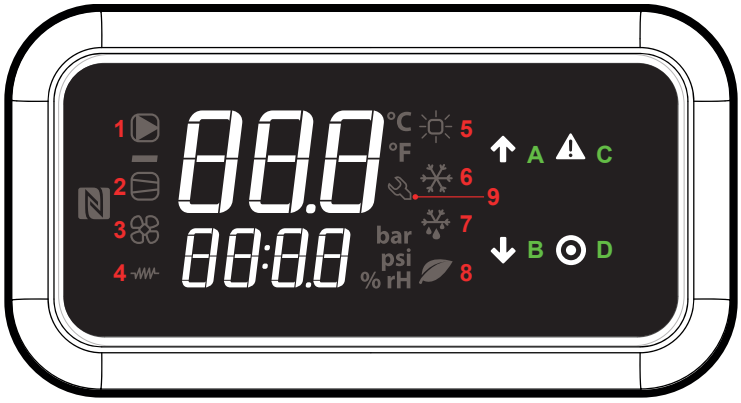

5.2.1 Display icons

1	Pump	8	Leaf
2	Compressor	9	Key
3	Fan	↑	UP
4	Heater	↓	DOWN
5	Sun	⚠	Alarm
6	Snow	⊙	Programm
7	Defrost		

5.2.2 Icon and Button Functions

▶	On if the desuperheater pump is running, off if not
	Turned on if the compressor is ON (dehumidification required), otherwise turned off
	Lights up fixed if the fan is running at operating speed / flashing if the fan is running at low speed; off in all other cases
	Turned on if the post-heating heater or hot water coil is running. Turned off in all other cases.
	Turned on when the seasonal setting is set to ‘winter’; otherwise turned off
	On when the season setting is set to summer / Flashing if the defrost count is active. Off otherwise.
	On if the defrost cycle is active or the unit is in the post-drain phase / Flashing if draining. Off otherwise.
	Flashes when two set points are active; off otherwise
	On if the settings menu is currently displayed. Off otherwise.
↑	ALWAYS ON. If on the main screen, this allows access to the ‘Current Set Points’ menu. Otherwise, return to the previous menu.
↓	ALWAYS ON. If on the main screen, this allows access to the ‘Loads and Sensors’ menu. Otherwise, proceed to the next menu.
⚠	Alarms menu, enabled when an alarm is active. If an alarm is active, this allows you to access the active alarms menu and view it. If there is no alarm, the button is disabled.
⊙	ENTER button. On the main screen, this gives access to the ‘Main menu’.

5.3 Internal menus

Menu navigation from the main screen.

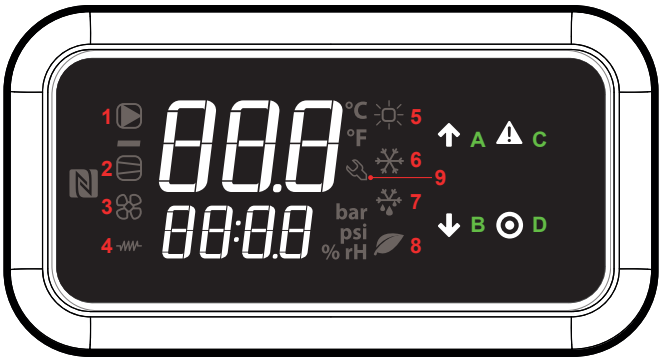

5.3.1 Current set point

Current dehumidification set point

Current temperature set point

Seasonal selection via the display (if available)

5.4 Loads menu

Current exhaust fan speed

Compressor status

Defrost temperature

Ambient relative humidity

Return temperature

Supply temperature

5.5 Main menu

From the main menu, pressing ⊙ will display the password request (default password: 0000)

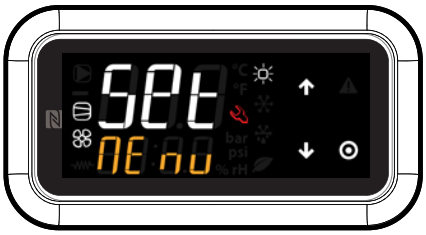

Parameters: All set points

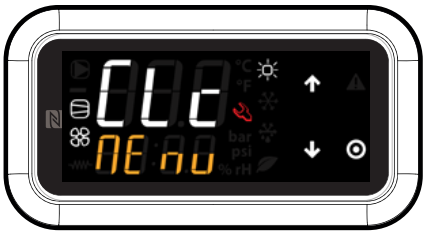

Clock menu

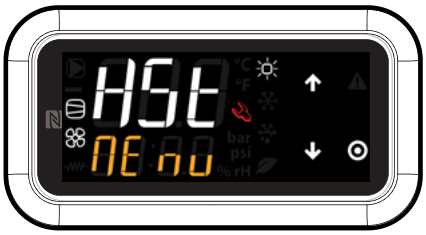

Alarm history menu

IO Menu

5.6 Other notes

- The buzzer can be configured as required in the event of an alarm using parameter Y98.
- NFC is not currently available. WIP
- Modbus registers are covered in additional documentation. WIP
- The remote control panel is not currently available.

6. MAINTENANCE OF THE UNIT

6.1 General warnings

Starting from 01/01/2016 the new European Regulation 517_2014, “Obligations concerning the containment, use, recovery and destruction of fluorinated greenhouse gases used in stationary refrigeration, air conditioning and heat pumps”, became effective. This unit is subject to the following regulatory obligations, which have to be fulfilled by all owners, operators and technical staff:
(a) Keeping the equipment records
(b) Correct installation, maintenance and repair of equipment
(c) Leakage control
(d) Refrigerant recovery and disposal management
(e) Presentation to the Ministry of the Environment of the annual declaration concerning the atmospheric emissions of fluorinated greenhouse gases.

Maintenance can:

- Keep the equipment operating efficiently
- Prevent failures
- Increase the equipment life

It is advisable to maintain a record book for the unit which details all operations performed on the unit as this will facilitate troubleshooting.

Maintenance must be performed in compliance with all requirements of the previous paragraphs.

Use personal protective equipment required by regulations as compressor casings and discharge pipes are at high temperatures. Coil fins are sharp and present a cutting hazard.

If the unit is not to be used during the winter period, the water contained in the pipes may freeze and cause serious damage. In this event, fully drain the water from the pipes, checking that all parts of the circuit are empty including any internal or external traps and siphons.

If it is necessary to replace a component of the machine, both for ordinary and extraordinary maintenance, this component must have the same or higher characteristics than those present. The same or higher performances or thicknesses are meant for the characteristics, which do not compromise the safety, the use, the handling, the storage, the pressures and the temperatures of use of the machine provided by the manufacturer.

The taps in the machine must always be in open position before starting. If it is necessary to disconnect the refrigeration circuit by closing the taps, it is necessary to take precautions to prevent the unit from starting up, even accidentally, and to indicate that the taps have been properly closed with special signs, both on the tap and in the electrical panel. In any case, the taps must remain closed as less as possible.

6.2 Drive access

Access to the unit once installed, should only be possible to authorized operators and technicians. The owner of the equipment is the company legal representative, entity or person owns the property where the machine is installed.
They are fully responsible for all safety rules given in this manual and regulations.

6.3 Scheduled maintenance

The owner must make sure that the unit is periodically inspected, also on-site, adequately maintained, according to the type, size, age and use of the system, and to the indications contained in the Manual.
Servicing during the unit's operating lifetime and, in particular, scheduled leak detection, on-site inspections and check-ups of safety equipment, must be carried out as provided by local laws and regulations in force.

If leak detection instruments are installed on the system, they must be inspected at least once a year, to make sure that they work properly.

During its operating life, the unit shall be inspected and verified in accordance with applicable local laws and regulations. In particular, when there are no stricter specifications, the indications given in the following table (see EN 378-4, Annex D) must be followed, with reference to the situations described.

CASE	Visual Inspection	Pressure Test	Search for leaks
A	X	X	X
B	X	X	X
C	X		X
D	X		X

A	Inspection after an intervention with possible effects on the mechanical strength or after use change or in case the machine has not being working for more than two years. Replace all the components which are not suitable any more. Do not carry out checks at a higher pressure than the one indicated in the project.
B	Inspection after a repair, or significant adjustment of the system, or its components. The check may be limited to the interested parts, but if a leakage of refrigerant is detected, a leakage search must be carried out on the entire system.
C	Inspection after installation in a different position than the original one. Refer to point A when mechanical strength could have been affected by the change.
D	Leak search, following a well-founded suspicion of refrigerant leakage. It is recommended examined the system for leakage, either directly (use of leak detection systems) or indirectly (deduction of leakage based on analysis of operating parameters), focusing on the parts most prone to leakage (e.g. joints).

If a defect is detected that compromises the reliable operation of the unit, the unit cannot be re-started until it has been repaired.

6.4 Periodical checks

The start-up operations should be performed in compliance with all requirements of the previous paragraphs.

All of the operations described in this chapter MUST BE PERFORMED BY TRAINED PERSONNEL ONLY. Before commencing service work on the unit ensure that the electric supply is disconnected. The top case and discharge line of compressor are usually at high temperature. Care must be taken when working in their surroundings. Aluminium coil fins are very sharp and can cause serious wounds. Care must be taken when working in their surroundings. After servicing, replace the cover panels, fixing them with locking screws.

6.4.1 Electrical system and adjustment

Action to be performed	Frequency					
	Monthly	Every 2 months	Every 6 months	Every year	Every 5 years	As necessary
Check that the unit works properly and that there are no active warnings	X					
Visually inspect the unit	X					
Check noise and vibration level of the unit				X		
Check operation of safety features and of interblocks				X		
Check the unit's performance				X		
Check the current draws of the different parts (compressors, fans, pumps, etc.)				X		
Check the supply voltage of the unit			X			
Check tightness of cables in their clamps			X			
Check the integrity of the insulating coating of power cables				X		
Check the conditions and functioning of the counters				X		
Check functioning of the microprocessor and of the display			X			
Clean the electrical and electronic components of any dust				X		
Check functioning and calibration of probes and transducers				X		

6.4.2 Condensing coils and fans

Action to be performed	Frequency					
	Monthly	Every 2 months	Every 6 months	Every year	Every 5 years	As necessary
Visually inspect the coil	X					
Clean finned coils			X			
Check the water flow and/or any leaks (if HOWA is present)	X					
Clean the metal filter on the external water line [2] (if present)			X			
Check noise and vibration level of the fans				X		
Check the supply voltage of the fans			X			
Check the fans' electrical connections				X		
Check functioning and calibration of the fans' speed adjustment system (if present)				X		
Check air presence in the hydraulic circuit	X					
Check color of moisture indicator on liquid line				X		
Check for freon leaks [1]						X

[1] In order to carry out operations on the refrigerant, it is necessary to observe the European Regulation 517_2014, "Obligations regarding the containment, use, recovery and destruction of fluorinated greenhouse gases used in stationary refrigeration, air conditioning and heat pump equipment".

[2] It can be carried out with a higher frequency (also weekly) depending on the Δt.

6.4.3 Compressors

Action to be performed	Frequency					
	Monthly	Every 2 months	Every 6 months	Every year	Every 5 years	As necessary
Visually inspect compressors				X		
Check noise and vibration level of the compressors				X		
Check the supply voltage of the compressors			X			
Check the compressors' electrical connections				X		
Check oil level in the compressors using the oil fill level indicator (if present)			X			
Check that the crankcase heaters are powered and working properly (if present)				X		
Check the conditions of the compressors' power cables and their tightness in the clamps			X			

Daily and monthly works may be carried out directly by the Owner of the system. All other works must be performed by authorised and trained personnel.

Any kind of cleaning whatsoever is forbidden before disconnecting the device from power supply by turning the master switch to the OFF position. It is forbidden to touch the device while barefooted or with wet or damp body parts.

Works on the cooling line must be carried out by qualified and trained technicians, as provided by local laws and regulations in force.

Before the start-up it is necessary to carry out all the operations described in the previous tables and make the necessary checks provided by the pre-start control module (valid for the italian market) to be requested to the service.

6.5 Refrigerant circuit repair

Maintenance must be carried out by qualified personnel with suitable equipment and an adequate procedure considering the presence of pressurised A2l refrigerant:
1.Ensure that maintenance is performed by competent and qualified personnel;
2.Avoid using ignition or heat sources without first performing recovery and vacuum;
3.Recover the refrigerant using appropriate equipment;
4.Perform a vacuum system after refrigerant recovery to avoid the risk of ignition or pressure increase;
5.Flush to ensure there is no flammable refrigerant retained in the oil in the circuit;
6.Carry out maintenance operations by disconnecting any piping sections with pipe cutters and other tools that do not involve the supply of heat;
7.Carry out rework taking into account the temperature and pressure limits reported on the label;
8.Check the tightness of the system.
The entire intervention must be carried out in accordance with EN 378-4.

If the refrigerant circuit is to be emptied, all the refrigerant must be recovered using the correct equipment.

For leak detection, the system should be charged with nitrogen using a gas bottle with a pressure reducing valve, until 15 bar pressure is reached. Any leakage is detected using a bubble leak finder. If bubbles appear discharge the nitrogen from the circuit before brazing using the proper alloys.

Never use oxygen instead of nitrogen: explosions may occur.

Site assembled refrigerant circuits must be assembled and maintained carefully, in order to prevent malfunctions.

Therefore:
- Avoid oil replenishment with products that are different from that specified and that are pre-loaded into the compressor.
- When replacing any part of the refrigerant circuit, do not leave it exposed for more than 15 minutes.
- It is important when replacing a compressor that the task be completed within the time specified above after removing the rubber sealing caps.
- When replacing the compressor following a burn out, it is advisable to wash the cooling system with appropriate products including a filter for acid.
- When under vacuum do not switch on the compressor.

7. DECOMMISSIONING

7.1 Disconnect the unit

All decommissioning operations must be performed by authorized personnel in accordance with the national legislation in force in the country where the unit is located.

- Avoid spills or leaks into the environment.
- Before disconnecting the machine please recover:
  - the refrigerant gas;
  - Glycol mixture in the hydraulic circuit;
  - the compressor lubricating oil.

Before decommissioning the machine can be stored outdoors, providing that it has the electrical box, refrigerant circuit and hydraulic circuit intact and closed.

7.2 Disposal, recovery and recycling

The frame and components, if unusable, should be taken apart and sorted by type, especially copper and aluminum that are present in large quantities in the machine.
All materials must be recovered or disposed in accordance with national regulations.

The refrigerant circuit of the unit contains lubricant oil that binds the disposal mode of components .

7.3 RAEE Directive (only UE)

The crossed-out bin symbol on the label indicates that the product complies with regulations on waste electrical and electronic equipment.
The abandonment of the equipment in the environment or its illegal disposal is punishable by law.

This product is included in the application of Directive 2012/19/EU on the management of waste electrical and electronic equipment (WEEE).
The unit should not be treated with household waste as it is made of different materials that can be recycled at the appropriate facilities. Inform through the municipal authority about the location of the ecological platforms that can receive the product for disposal and its subsequent proper recycling.
The product is not potentially dangerous for human health and the environment, as it does not contain dangerous substances as per Directive 2011/65/EU (RoHS), but if abandoned in the environment it has a negative impact on the ecosystem.
Read the instructions carefully before using the unit for the first time. It is recommended not to use the product for any purpose other than that for which it was designed, as there is a risk of electric shock if used improperly.

8. DIAGNOSIS AND TROUBLESHOOTING

8.1 Fault finding

All units are checked and tested at the factory before shipment, however, during operation an anomaly or failure can occur.

BE SURE TO RESET AN ALARM ONLY AFTER YOU HAVE REMOVED THE CAUSE OF THE FAULT; REPEATED RESET MAY RESULT IN IRREVOCABLE DAMAGE TO THE UNIT.

Code	Alarm description	Cause	Recommended action
A25	High Pressure Alarm	Insufficient airflow or room temperature above the permitted operating range.	Check the filters and replace them if necessary. Check airflow and ensure that the room temperature is within the permitted operating range. In ducted versions, check the duct pressure drop. If the alarm persists, contact the Service Department.
A29	Low Pressure Alarm	Insufficient airflow, low room temperature or a refrigerant circuit fault.	Check the filters and replace them if necessary. Check airflow and ensure that the room temperature is within the permitted operating range. If the alarm persists, contact the Service Department.
A04	Return Air Temperature Sensor Fault	Return air temperature sensor disconnected, incorrectly wired or faulty.	Check the sensor connection and wiring. Replace the sensor if faulty. If the alarm persists, contact the Service Department.
A05	Return Air Relative Humidity Sensor Fault	Return air relative humidity sensor disconnected, incorrectly wired or faulty.	Check the sensor connection and wiring. Replace the sensor if faulty. If the alarm persists, contact the Service Department.
A30	Compressor Thermal Protection Alarm	Compressor thermal protection activated due to abnormal operating conditions.	Allow the compressor to cool down. Check airflow, filters, fan operation and power supply. If the alarm occurs again, contact the Service Department.
A100	Low Supply Air Temperature Alarm	Supply air temperature below the permitted threshold.	Check the filters, airflow, return air temperature and operating conditions. If the alarm persists, contact the Service Department.
A101	High Supply Air Temperature Alarm	Supply air temperature above the permitted threshold.	Check the filters, airflow, room temperature and operating conditions. If an electric heater is fitted, check its operation. If the alarm persists, contact the Service Department.
A500	Defrost Sensor Fault	Defrost sensor disconnected, incorrectly wired or faulty.	Check the sensor connection and wiring. Replace the sensor if faulty. If the alarm persists, contact the Service Department.

9.DIMENSIONAL DRAWINGS

DC 50

ES	INPUT POWER
EP	ELECTRICAL PANEL
CD	DRAIN
IN	WATER INLET
OUT	WATER OUTLET

DC 100

ES	INPUT POWER
EP	ELECTRICAL PANEL
CD	DRAIN
IN	WATER INLET
OUT	WATER OUTLET

DC 200

ES	INPUT POWER
EP	ELECTRICAL PANEL
CD	DRAIN
IN	WATER INLET
OUT	WATER OUTLET

10 . EU DECLARATION OF CONFORMITY

Maintenance and Service Report

Date _____ Job No. _____ Model _____

Type of Service: ☐ Commissioning ☐ Maintenance ☐ F-Gas inspection

Serial number _____

Customer No./Name	City / Town
Address	Phone number

Date	Start of work	End of work	Total work time (hours)	Travel time (hours)	Total travel distance (km)

Operating conditions — Measurements

Suction line temperature:	°C				
Liquid line temperature:	°C				
Evaporation pressure:	bar				
Condensation pressure:	bar				
Superheating:	K				
Subcooling:	K				
Outdoor temperature:	°C				
Discharge line temperature at compressor outlet:	°C				
Outlet air temperature/humidity:	°C / % RH				
Inlet air temperatur/humidtiy:	°C / % RH				
Outlet air flow:	m^3/h				
Inlet air flow:	m^3/h				

Name and signature of service technician _____

Name and signature upon acceptance of the work _____

Maintenance and Service Report

Date _____ Job No. _____ Model _____

Type of Service: ☐ Commissioning ☐ Maintenance ☐ F-Gas inspection

Serial number _____

Customer No./Name	City / Town
Address	Phone number

Date	Start of work	End of work	Total work time (hours)	Travel time (hours)	Total travel distance (km)

Operating conditions		Measurements			
Suction line temperature:	°C				
Liquid line temperature:	°C				
Evaporation pressure:	bar				
Condensation pressure:	bar				
Superheating:	K				
Subcooling:	K				
Outdoor temperature:	°C				
Discharge line temperature at compressor outlet:	°C				
Outlet air temperature/humidity:	°C / % RH				
Inlet air temperatur/humidtiy:	°C / % RH				
Outlet air flow:	m³/h				
Inlet air flow:	m³/h				

Name and signature of service technician _____

Name and signature upon acceptance of the work _____

CONSULTING, SALES AND SERVICE:

CH94/0002.00

Condair Group AG
Gwattstrasse 17, 8808 Pfäffikon SZ, Switzerland
Phone +41 55 416 61 11, Fax +41 55 588 00 07
info@condair.com, www.condairgroup.com